REV5

Single Tank Certified Softening System

The **REV 5** is the beginning solution to cost-effective, high quality water treatment.

Why the REV 5?

Our REV 5 is designed with high flow rates to handle most residential or light commercial applications. It features innovative, patented ceramic discs that are abrasion and corrosion resistant, extending the life of the valve and significantly reducing maintenance costs. This system also uses high quality, crosslink resin for exceptional longevity.

The REV 5 valves within this system have fully adjustable programming options to minimize water usage during regeneration. It utilizes up-flow regeneration which efficiently washes the media, exchanging more grains per pound of salt. With a 72-hour memory back up, you have the confidence you need should a power outage ever occur.

Features:

Lifetime warranty on ceramic disc
Four languages including:
- English
- Spanish
- French
- Chinese

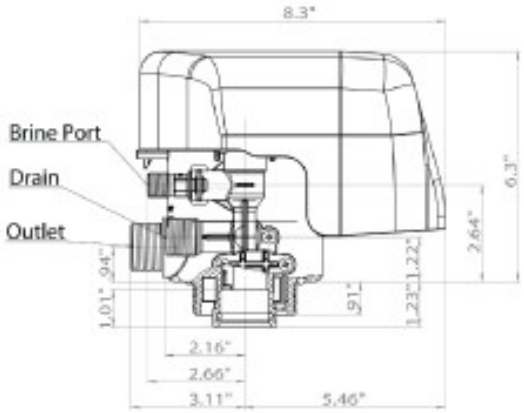

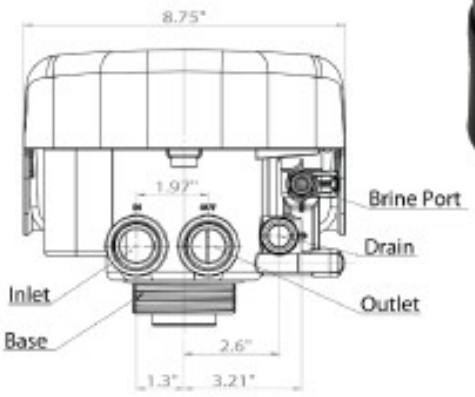

Commercial and residential. Leasing and financing. The best rates in town. Call us today!

956-581-8846

711 E. Griffin Pkwy.
Mission, TX 78572

www.thewaterboy.us